PS112 ND3

12" Point Source

1 x 12NTLW3500 + ND3T

PS112 ND3 | SPEAKERS

12NTLW3500 8Ω

SPECIFICATIONS

Nominal Diameter	300 mm (12.0 in)
Nominal Impedance	8 Ω
Minimum Impedance	5.8 Ω
Nominal Power Handling[1]	900 W
Continuous Power Handling[2]	1800 W
Sensitivity[3]	97.0 dB
Frequency Range	50 - 3000 Hz
Voice Coil Diameter	88 mm (3.5 in)

KEY FEATURES

- 97 dB SPL 1W / 1m average sensitivity
- 88 mm (3") ISV voice coil
- 900 W AES power handling
- Extremely balanced BL shape for maximum SPL
- Optimized thermal conductivity
- Maximum linearity and inductance symmetry for extended mid-band clarity
- Ideal for two-ways and line array applications

PARAMETERS[4]

Resonance Frequency	53 Hz
Re	5.1 Ω
Qes	0.35
Qms	8.0
Qts	0.33
Vas	45.0 dm^3 (1.59 ft^3)
Sd	531.0 cm^2 (82.31 in^2)
η_0	1.8 %
Xmax	8.3 mm
Mms	80.0 g
Bl	19.5 Txm
Le	0.46 mH
EBP	151 Hz

DESIGN

Surround Shape	Triple roll
Cone Shape	Curvilinear
Magnet Material	Neo
Recommended Enclosure	50.0 dm^3 (1.77 ft^3)
Recommended Tuning	58 Hz

MOUNTING AND SHIPPING INFO

Overall Diameter	310 mm (12.2 in)
Bolt Circle Diameter	295 mm (11.61 in)
Baffle Cutout Diameter	282.0 mm (11.1 in)
Depth	193 mm (7.6 in)
Flange and Gasket Thickness	13 mm (0.53 in)
Net Weight	4.7 kg (10.36 lb)
Shipping Weight	5.5 kg (12.13 lb)

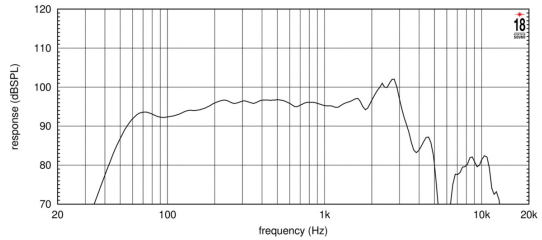

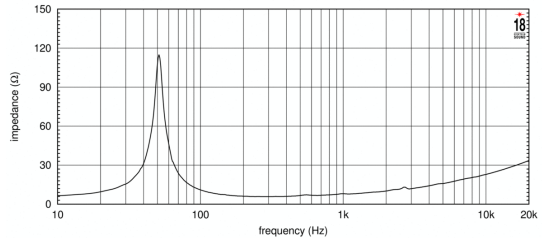

1. 2 hours test made with continuous pink noise signal within the range Fs-10Fs. Power calculated on rated minimum impedance. Loudspeaker in free air.
2. Power on Continuous Program is defined as 3 dB greater than the Nominal rating.
3. Applied RMS Voltage is set to 2.83 V for 8 ohms Nominal Impedance.
4. Thiele-Small parameters are measured after a high level 20 Hz sine wave preconditioning test.

PS112 ND3 | SPEAKERS

ND3T 8Ω

SPECIFICATIONS

Throat Diameter	36 mm (1.4 in)
Nominal Impedance	8 Ω
Minimum Impedance	6.4 Ω
Nominal Power Handling[1]	110 W
Continuous Power Handling[2]	220 W
Sensitivity[3]	112.0 dB
Frequency Range	0.8 - 20.0 kHz
Recommended Crossover[4]	1.2 kHz
Voice Coil Diameter	75 mm (3.0 in)
Winding Material	Aluminum
Diaphragm Material	Titanium
Flux Density	2.0 T
Magnet Material	Neodymium

KEY FEATURES

- Ultra compact design (OD 109mm - 4.3 in)
- 112 dB SPL 1W-1m average sensitivity
- 1.4 inch exit throat
- 220W maximum program power handling
- Natural Sound frequency response extended up to 20 kHz
- Next-gen 4-slot metal alloy phase plug
- Edge-wound 75mm (3 in) CCAW voice coil
- Titanium diaphragm assembly
- Neodymium ring magnetic structure
- Copper ring for reduced distortion and increased output
- Self-centering d-kit for accurate and fast service

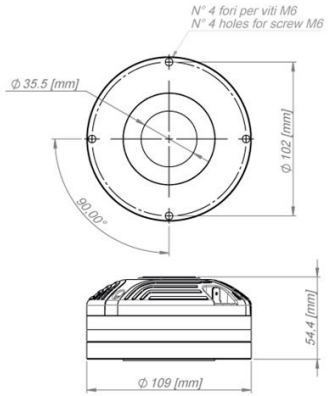

MOUNTING AND SHIPPING INFO

Overall Diameter	310 mm (12.2 in)
Bolt Circle Diameter	295 mm (11.61 in)
Baffle Cutout Diameter	282.0 mm (11.1 in)
Depth	193 mm (7.6 in)
Flange and Gasket Thickness	13 mm (0.53 in)
Net Weight	4.7 kg (10.36 lb)
Shipping Weight	5.5 kg (12.13 lb)

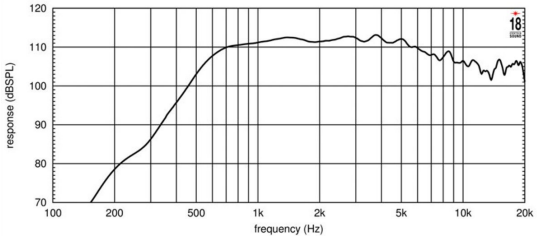

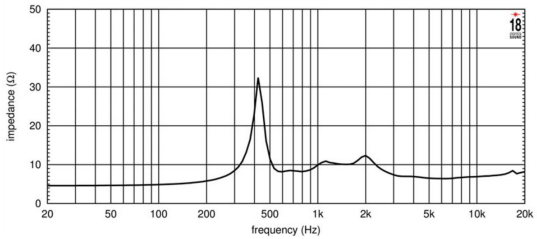

1. 2 hour test made with continuous pink noise signal within the range from the recommended crossover frequency to 20 kHz.. Power calculated on rated nominal impedance.
2. Power on Continuous Program is defined as 3 dB greater than the Nominal rating.
3. Applied RMS Voltage is set to 2.83 V for 8 ohms Nominal Impedance.
4. 12 dB/oct. or higher slope high-pass filter.

PS112 ND3 | BILL OF MATERIALS

- 1x 12NTLW3500 – 8 ohm
- 1x ND3 – 8 ohm
- 1x XR1496C or XR1464
- 1x Adapter 1.4 - 1.5
- 16x M5 Wood T-Nuts
- 8x M5 Hex socket head ISO 4762 with washer and grower
- 8x M5 Hex sochet CTSK head ISO 10642
- 2x Neutrik NL4MP
- Edilfiber damping material 30mm - 30kg/m^3
- Wood: 15mm Birch plywood

PS112 ND3 | MEASUREMENTS

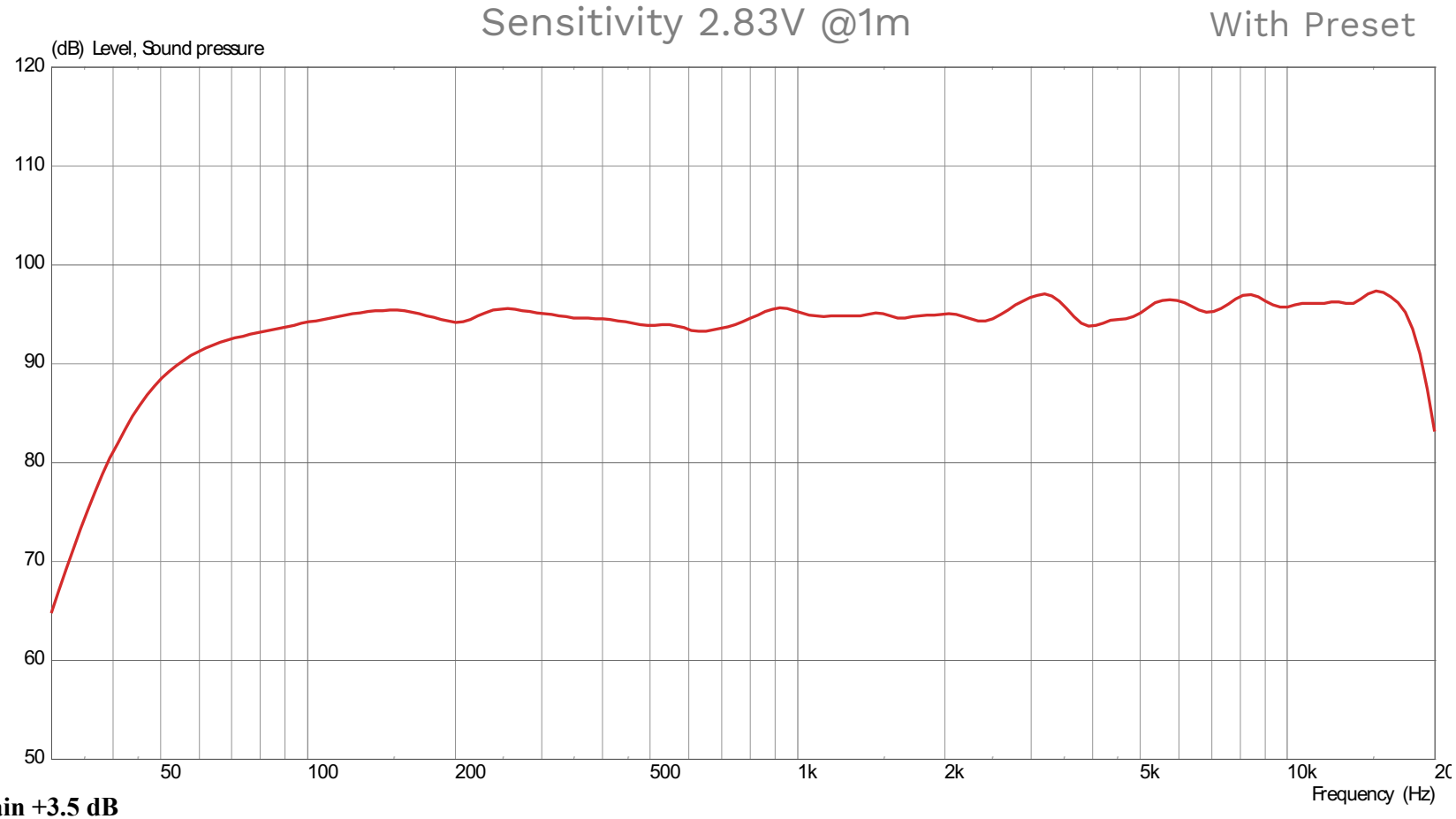

LF processing: Gain +3.5 dB
HP: 45Hz / Butterworth / 24dB/oct - Eq1: 60Hz / +2dB / Q:2 - Eq2: 135Hz / +6dB / Q:1.3 - Eq3: 350hz / +2dB / Q:1 Eq4: 670Hz / -2dB / Q:2 - Eq5: 1300hz / +2dB / Q:2
Allpass filter: 1350hz / Q:2. - LP: 1400Hz / 24dB/oct

HF processing: Gain -10 dB
HP: 1800Hz / Butterworth / 18dB/oct. - Eq1: 3260Hz / -3dB / Q:2 - Eq2: 5800Hz / +2dB / Q:2. - Eq3: 14khz / +6dB / Q:3. - HSH: 9KHz / +6dB / Q:1.25

PS112 ND3 | MEASUREMENTS

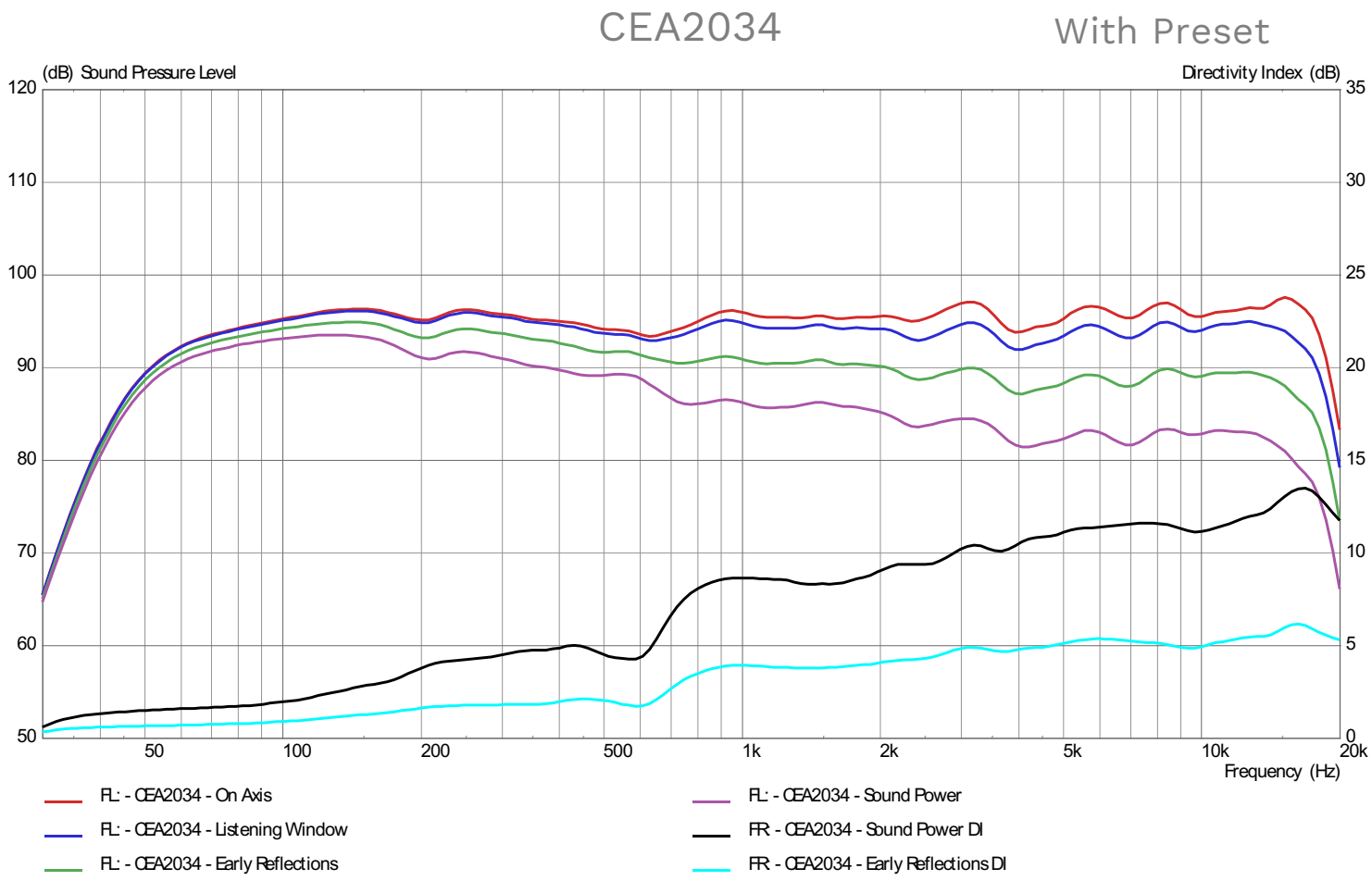

PS112 ND3 | MEASUREMENTS

Horizontal Contour

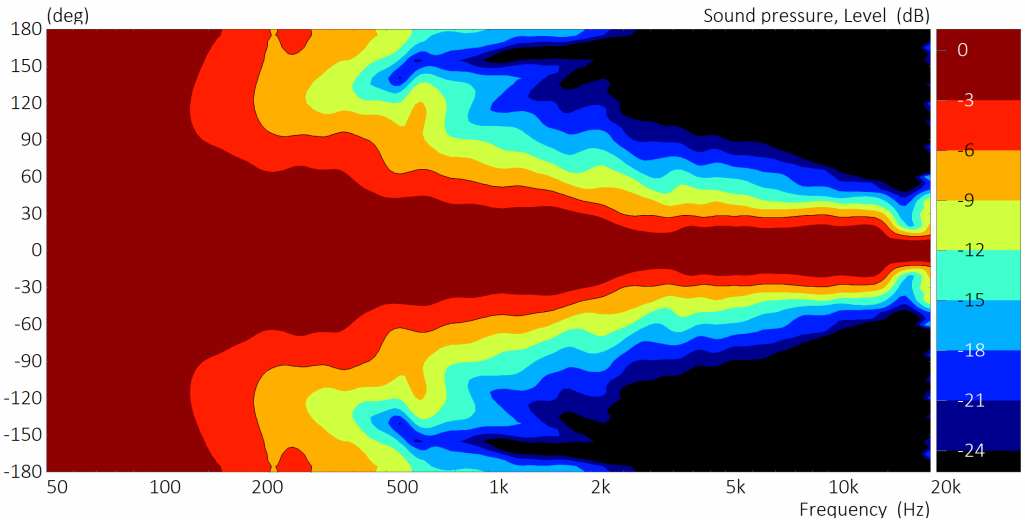

-6dB Beamwidth

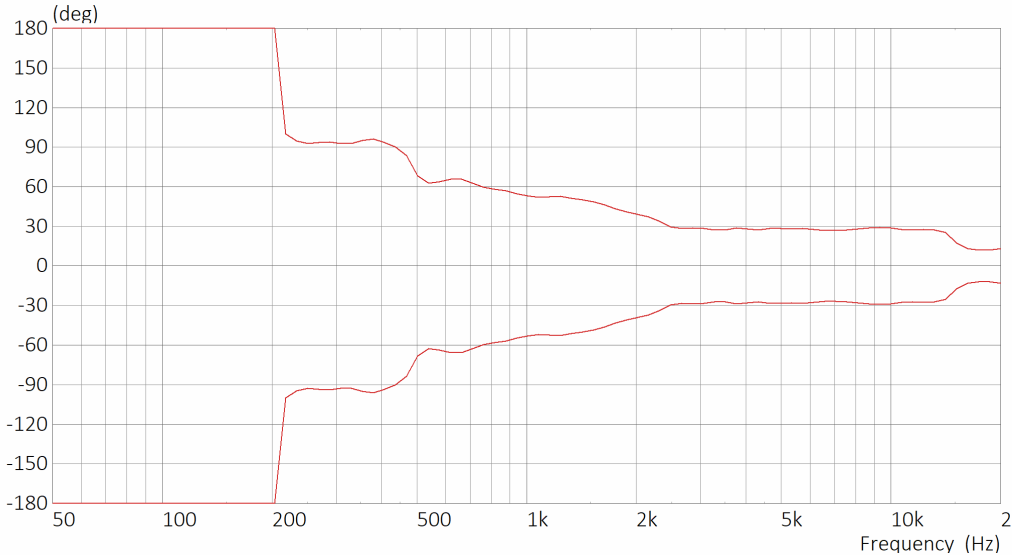

With Preset

PS112 ND3 | MEASUREMENTS

Vertical Contour

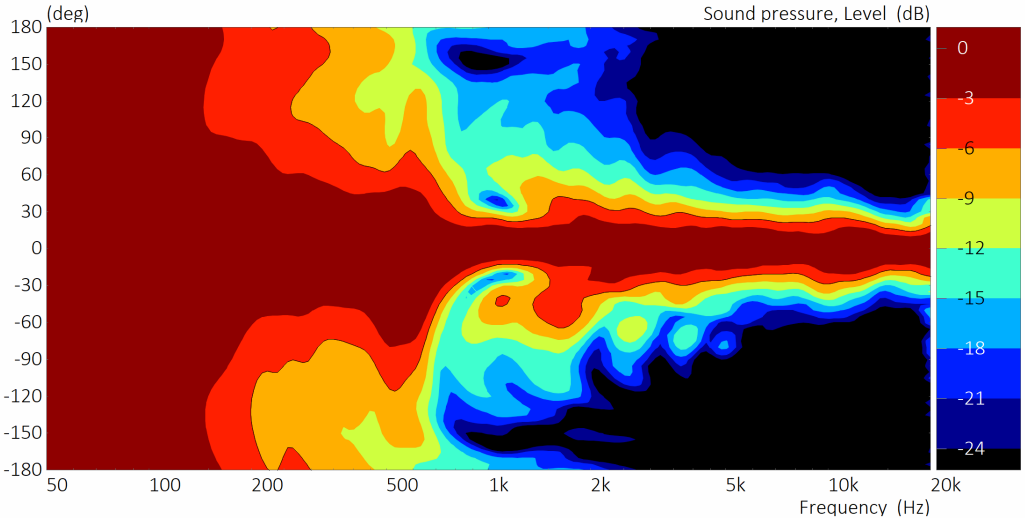

-6dB Beamwidth

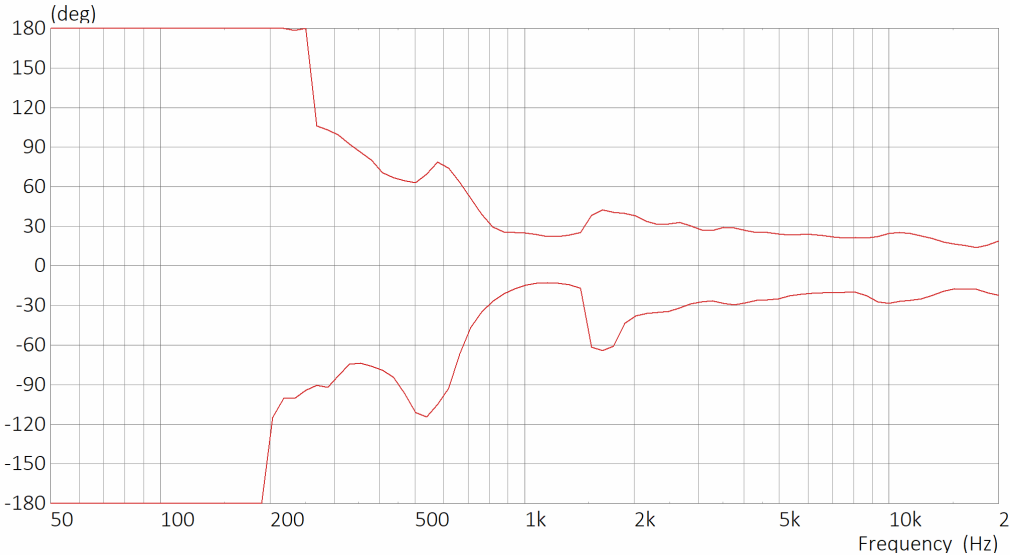

With Preset

PS112 ND3 - 4 OHMS PASSIVE VERSION

Low Frequency component: 12NTLW3500 - 4ohms or 12NW350 - 4ohms.

High frequency component: Any member of the ND3/ND3S family can be used with small Eq adjustments.

Horns: XR1464C or XR1496C

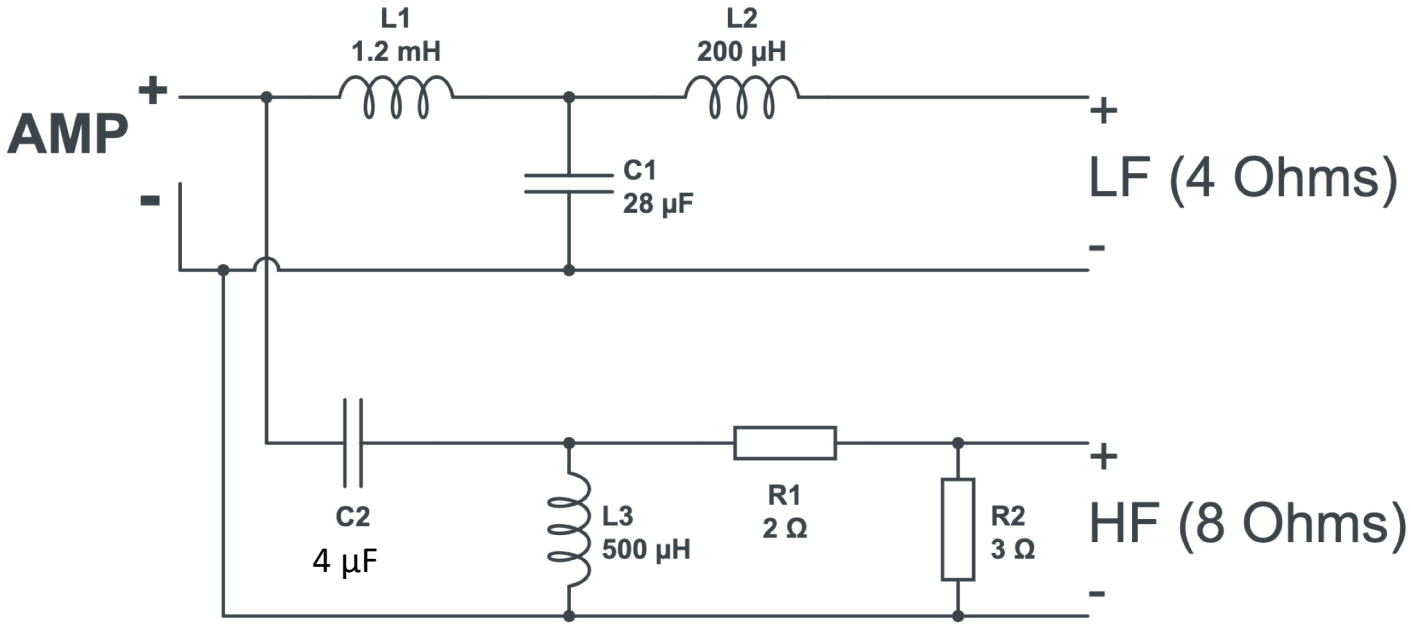

Passive crossover circuit

PS112 ND3 - 4 OHMS PASSIVE VERSION

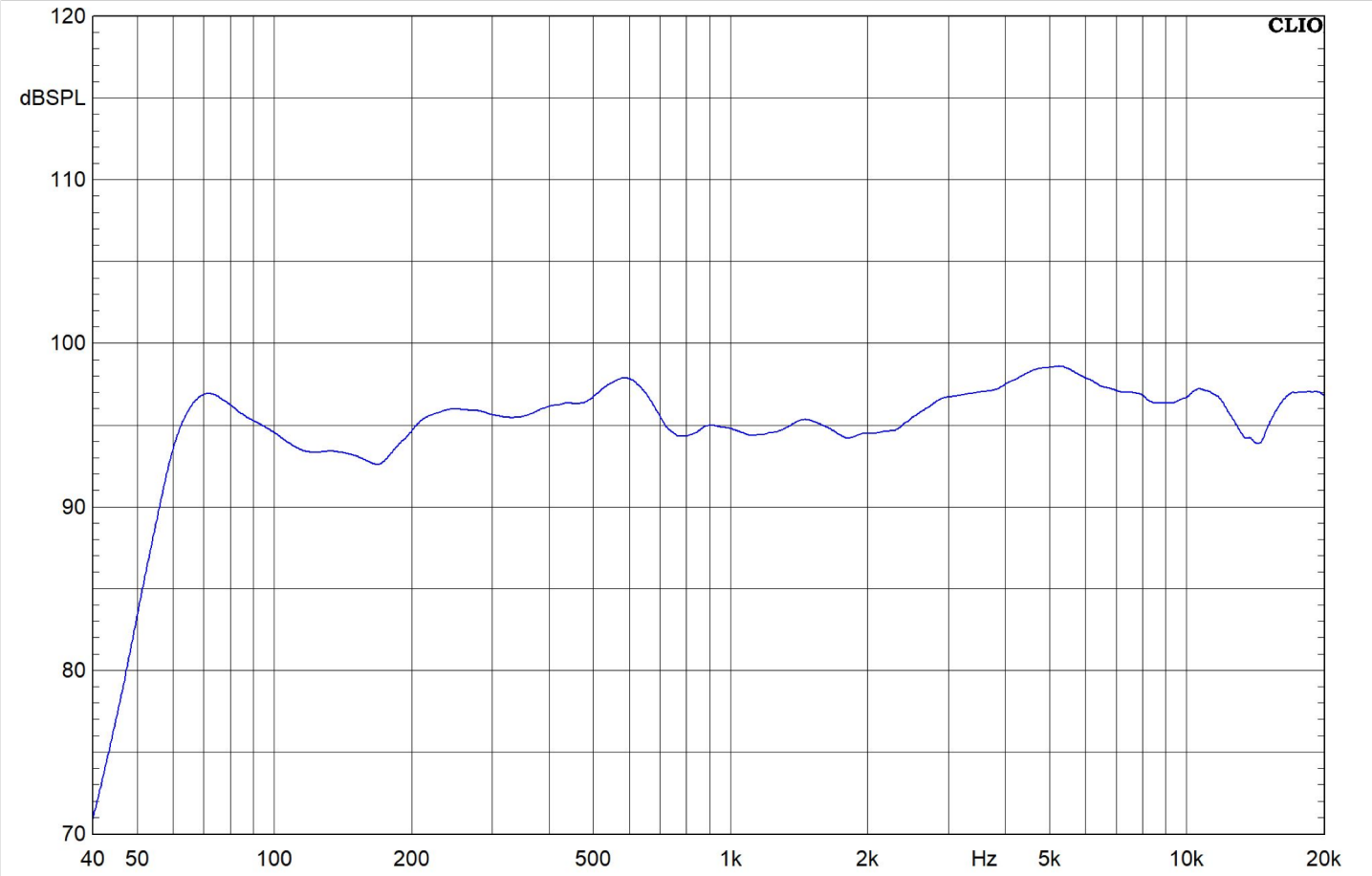

Frequency response (no Eq applied), at 1 meter on axis.
Measured with 12NTLW3500-4 and ND3T mounted on XR1464C horn.

PS112 ND3

Assembly Information

PS112 ND3 | DAMPING MATERIAL

Edilfiber (Polyester) 30kg/m^3 – 30mm thick

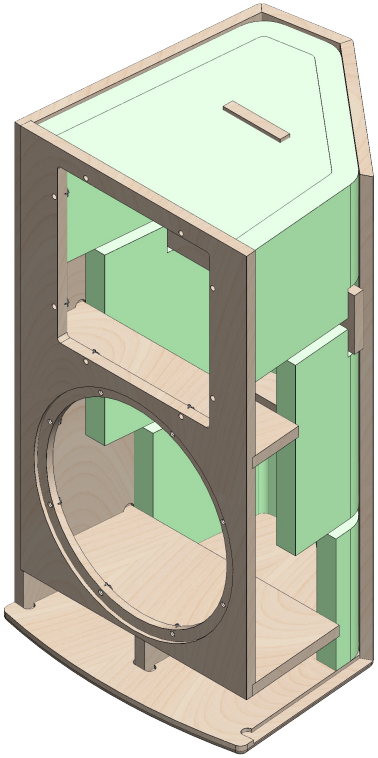

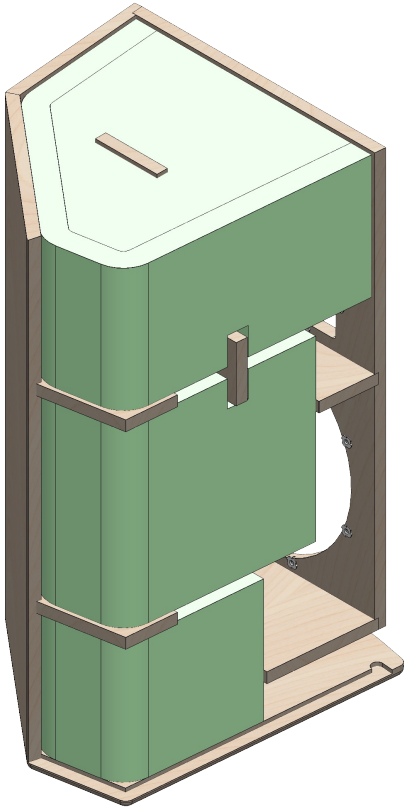

Follow carefully the quantity and positioning

PS112 ND3 | DIMENSIONS

Total dimensions

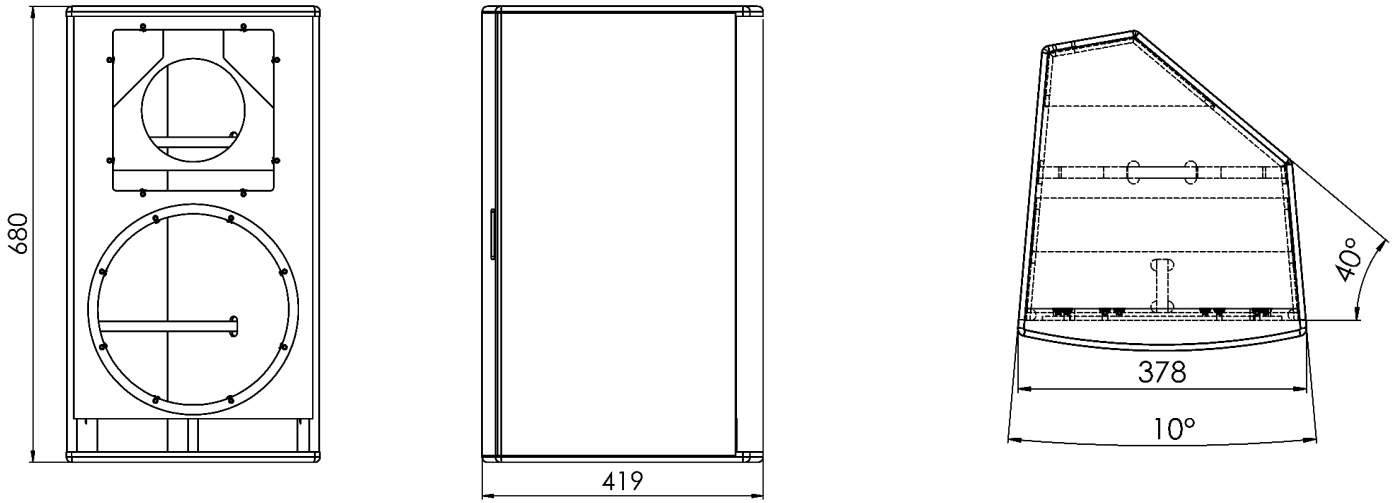

PS112 ND3 | DIMENSIONS

Top View

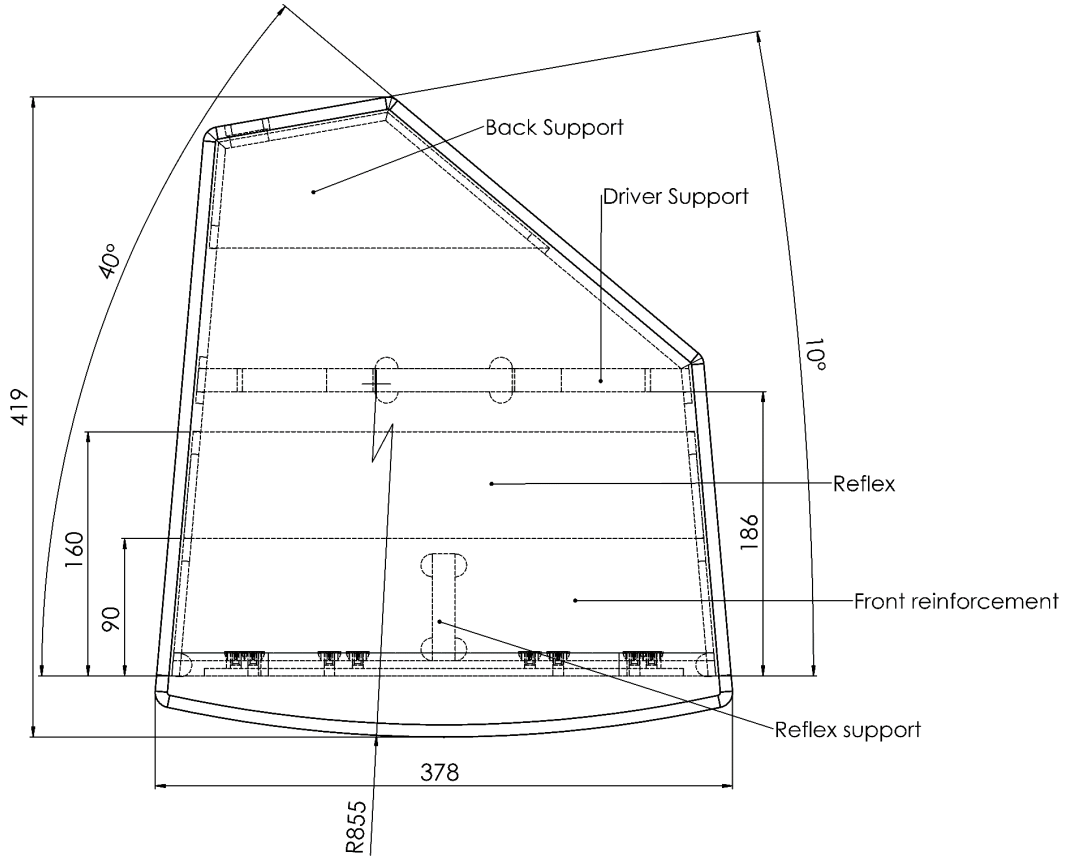

PS112 ND3 | DIMENSIONS

Front View

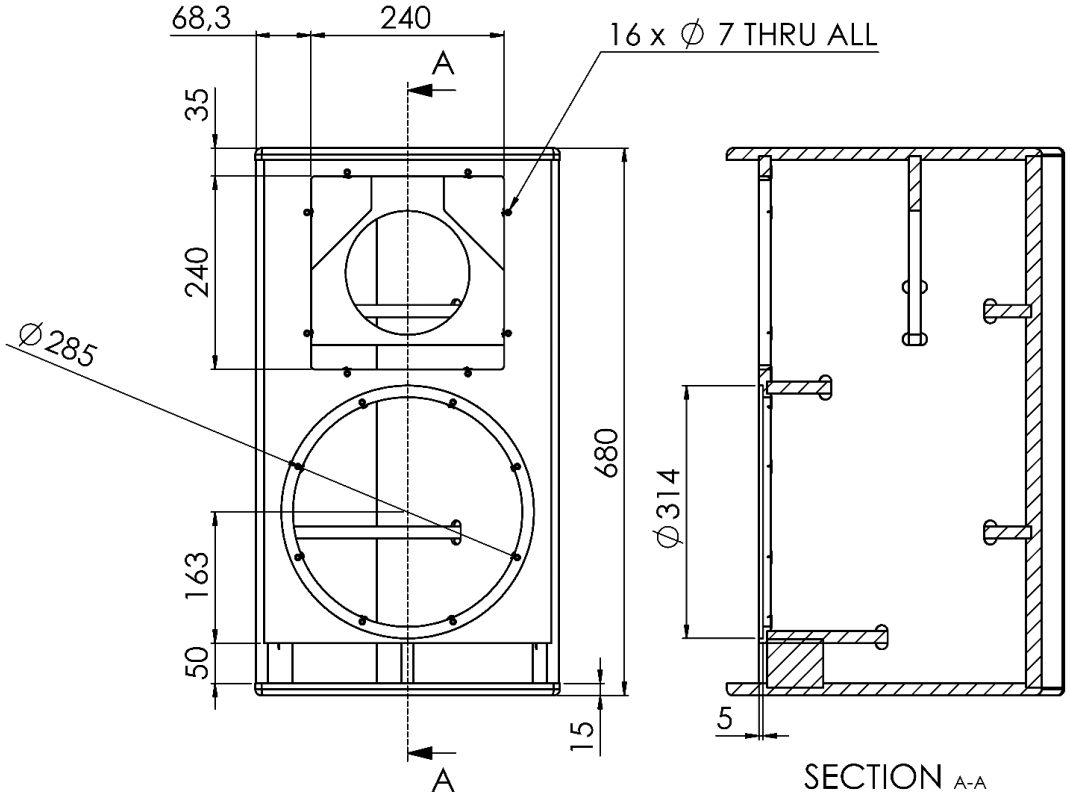

PS112 ND3 | DIMENSIONS

Back View

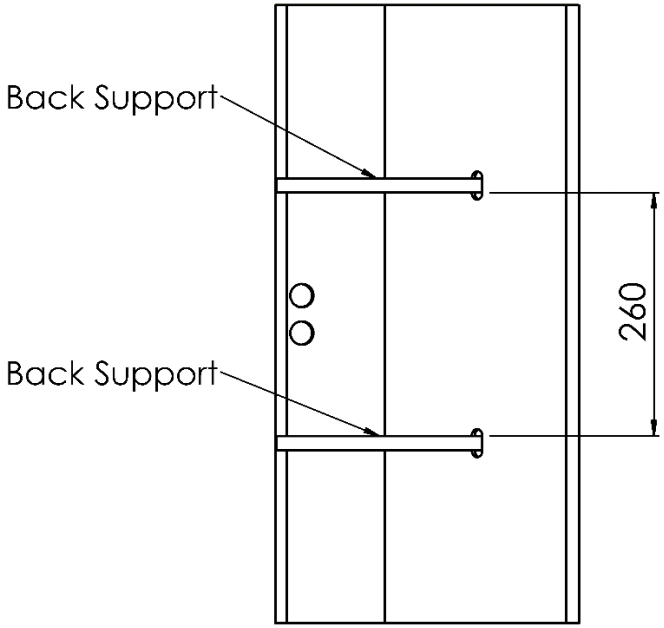

PS112 ND3 | DIMENSIONS

Baffle View

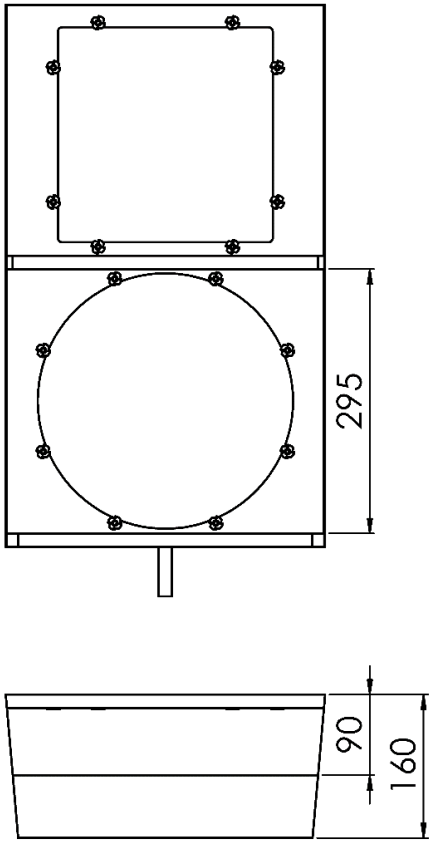

PS112 ND3 | DIMENSIONS

Side View

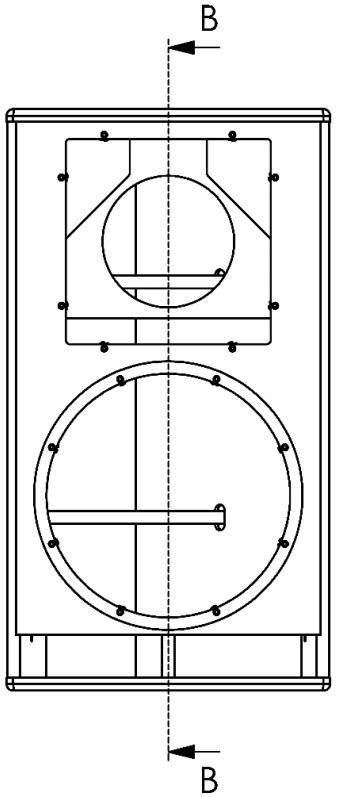

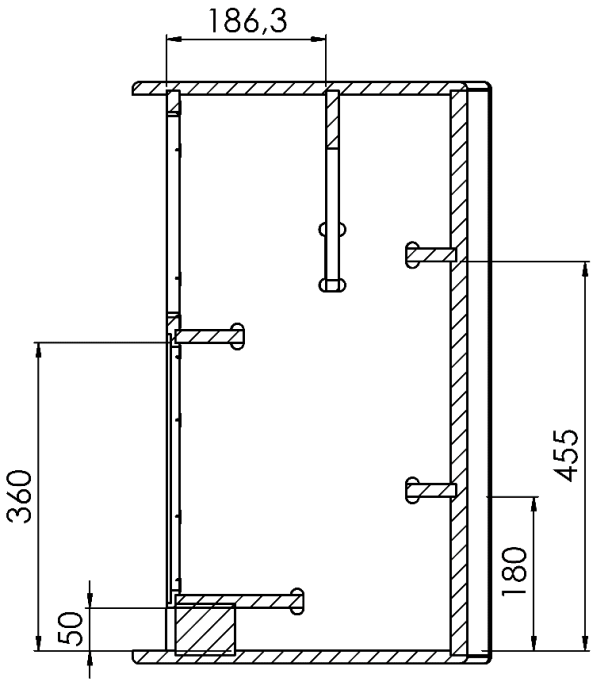

SECTION B-B

PS112 ND3 | DIMENSIONS
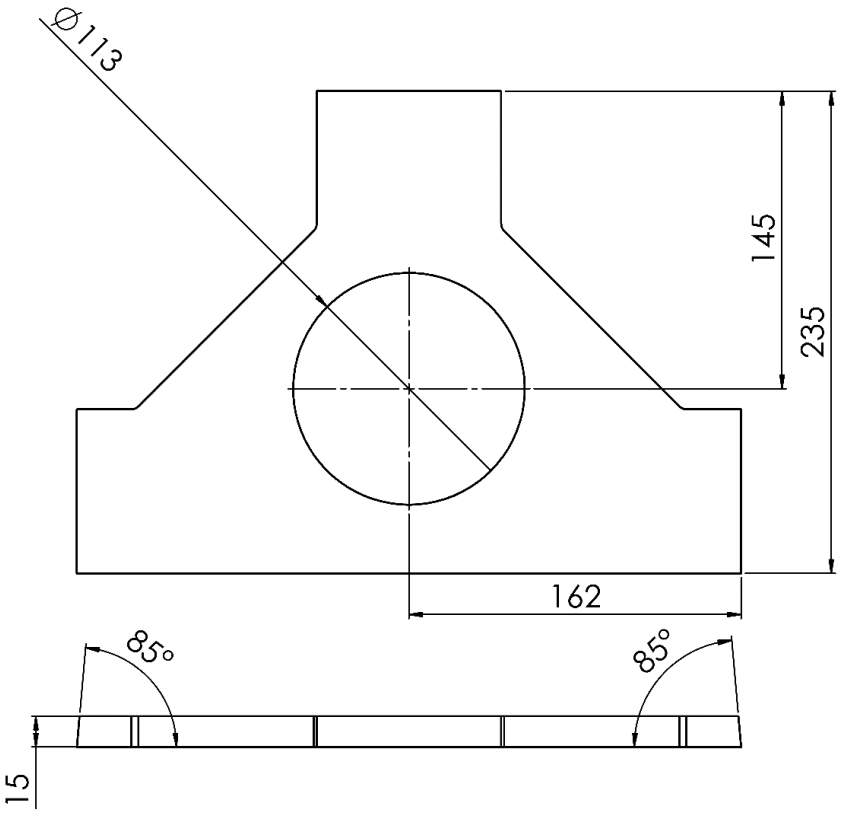
HF Driver Support