18LW2600 8Ω

LF drivers - 18.0 Inches

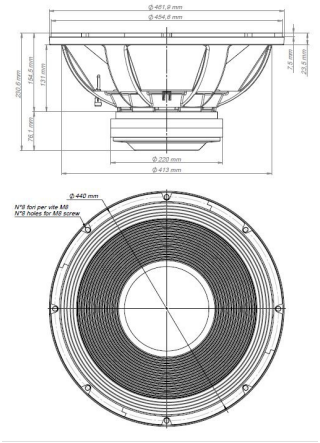

- 97 dB SPL 1W / 1m average sensitivity
- 100 mm (4 in) Interleaved Sandwich Voice coil (ISV)
- 3000W program power handling
- 60 mm peak to peak excursion
- Ultra linear dual magnet motor design
- Single Demodulating Ring (SDR) for lower distortion
- Composite reinforced straight ribbed cone
- Optimized high grade ferrite magnet assembly
- Recommended for subwoofer usage in compact vented enclosures

The 18LW2600 is a 18" (466 mm) extended low frequency loudspeaker,especially designed for use in vented enclosures. The loudspeaker is designed to withstand high power levels without damage while providing clean and undistorted LF reproduction at a very high SPL. For optimum results we recommend amplifiers able to deliver 3000 Watt program power. The 18LW2600 features a unique motor featuring a high grade ferrit magnet assembly in a structure optimized for thermal and magnetic efficiency. 18LW2600 features include a large displacement suspension system which, in conjunction with a composite reinforced, straight ribbed cone, allows an ultra-linear piston action and provides full mechanical control across the entire working range. The 100mm (4 in) state-of-theart voice-coil utilizing Interleaved Sandwich Voice coil (ISV) technology, provides high levels of thermal stability and durability. The ISV technology achieves a balanced linear motor unit exerting an exceptionally high force factor.

Eighteen Sound Srl
Via Botticelli 8 - 42124 Mancasale (RE) - ITALY - Ph. +39 0522 1861800 - Fax +39 0522 1861801 - info@eighteensound.it

18LW2600 8Ω

LF drivers - 18.0 Inches

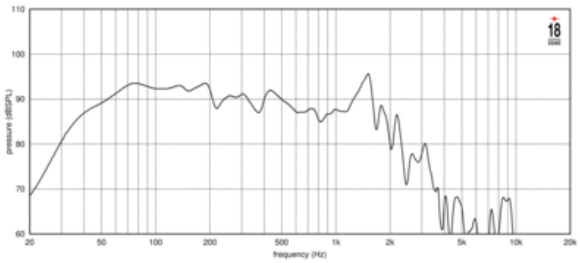

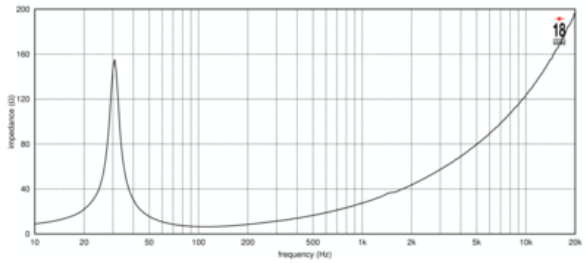

SPECIFICATIONS

Nominal Impedance	8 Ω
Minimum Impedance	6.4 Ω
Nominal Power Handling[1]	1500 W
Continuous Power Handling[2]	3000 W
Sensitivity[3]	96.8 dB
Frequency Range	30 - 800 Hz
Voice Coil Diameter	100 mm (4.0 in)
Winding Material	copper

DESIGN

Magnet Material	Ferrite
Recommended Enclosure	200.0 dm^3 (7.06 ft^3)
Recommended Tuning	33 Hz

PARAMETERS[4]

Resonance Frequency	31 Hz
Re	4.9 Ω
Qes	0.3
Qms	11.7
Qts	0.29
Vas	187.0 dm^3 (6.6 ft^3)
Sd	1225.0 cm^2 (189.88 in^2)
η_0	1.8 %
Xmax	14.8 mm
Xvar	16.0 mm
Mms	303.0 g
Bl	31.0 Txm
Le	3.42 mH
EBP	103 Hz

MOUNTING AND SHIPPING INFO

Overall Diameter	462 mm (18.19 in)
Bolt Circle Diameter	440 mm (17.32 in)
Baffle Cutout Diameter	416.0 mm (16.38 in)
Depth	231 mm (9.09 in)
Flange and Gasket Thickness	23 mm (0.93 in)
Net Weight	16.1 kg (35.49 lb)
Shipping Weight	16.5 kg (36.38 lb)

1. 2 hours test made with continuous pink noise signal within the range Fs-10Fs. Power calculated on rated minimum impedance. Loudspeaker in free air.
2. Power on Continuous Program is defined as 3 dB greater than the Nominal rating.
3. Applied RMS Voltage is set to 2.83 V for 8 ohms Nominal Impedance.
4. Thiele-Small parameters are measured after a high level 20 Hz sine wave preconditioning test.

Eighteen Sound Srl
Via Botticelli 8 - 42124 Mancasale (RE) - ITALY - Ph. +39 0522 1861800 - Fax +39 0522 1861801 - info@eighteensound.it